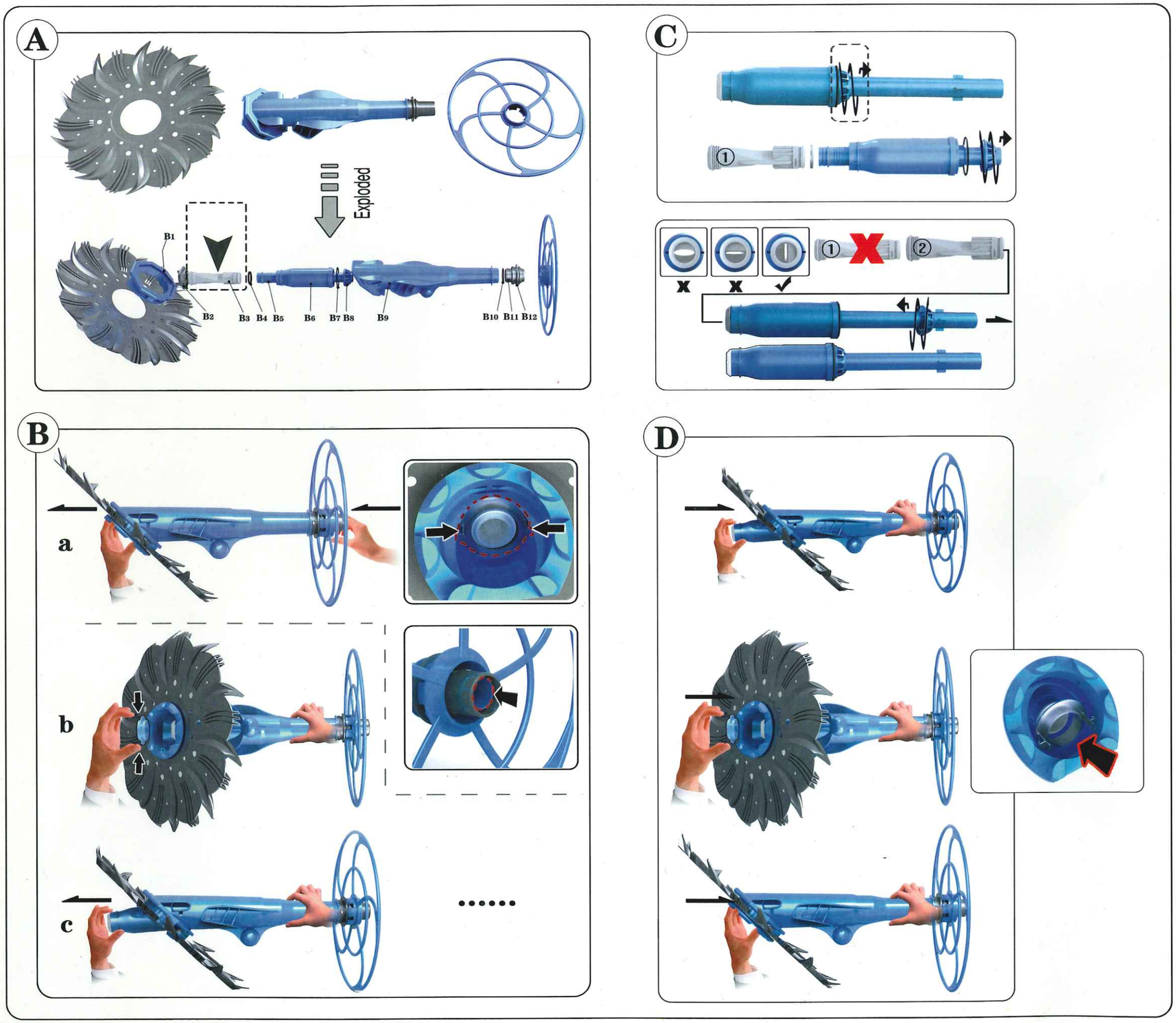
A
Exploded
B1
B2
B3 B4 B5
B6
B7 B8
B9
B10 B11 B12
B
a
b
c
.....
C
①
①
②
D

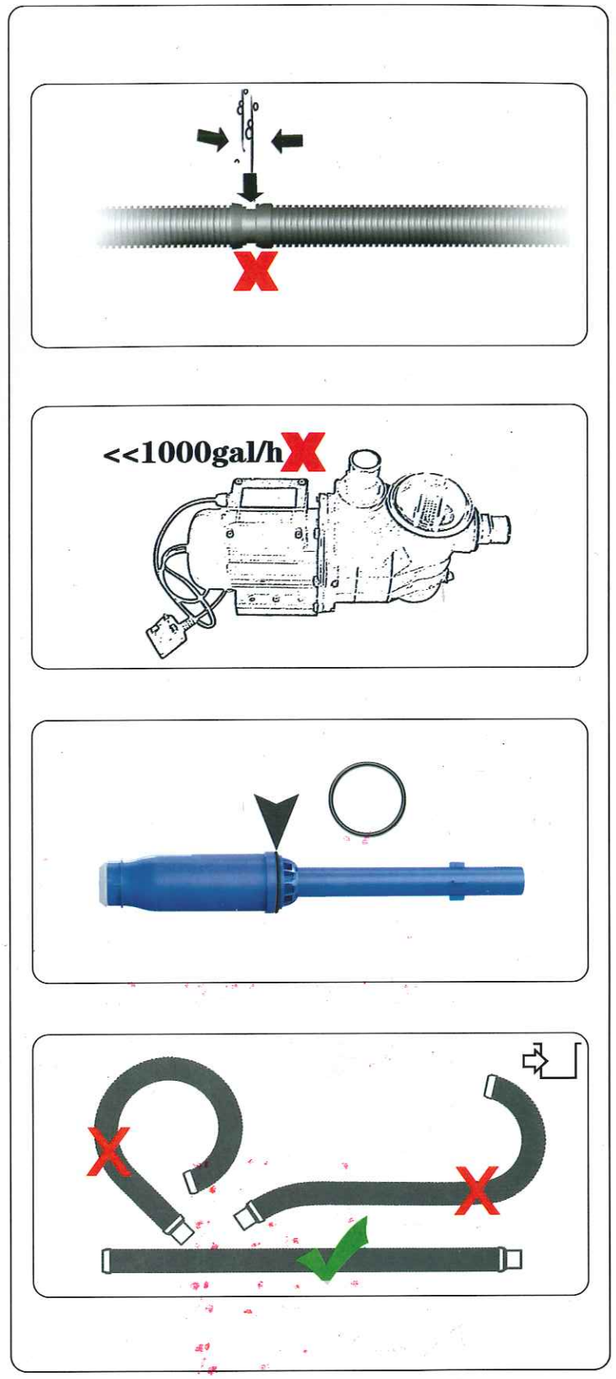
<<1000gal/h